OUNEVA
OUNEVA GROUP

INSTALLATION GUIDE

Product data

Product code	Product name	$I_{n\ Al}$	$I_{n\ Cu}$	U_n	US specific		
					$I_{max\ Al}$	$I_{max\ Cu}$	U_{max}
VC05-0013	OTL-connector 1xAl/Cu 1,5-50mm² (Grey)	145 A	160 A	1000 V	120 A	150 A	600 V
VC05-0046	OTL-connector 1xAl/Cu 1,5-50mm² (Blue)	145 A	160 A	1000 V	120 A	150 A	600 V
VC05-0047	OTL-connector 1xAl/Cu 1,5-50mm² (Yellow/Green)	145 A	160 A	1000 V	-	-	-
VC05-0142	OTL-connector 1xAl/Cu 1,5-50mm² (Red)	145 A	160 A	1000 V	-	-	-
VC05-0143	OTL-connector 1xAl/Cu 1,5-50mm² (Black)	145 A	160 A	1000 V	-	-	-

Installation

Type **DIN-rail mounting**

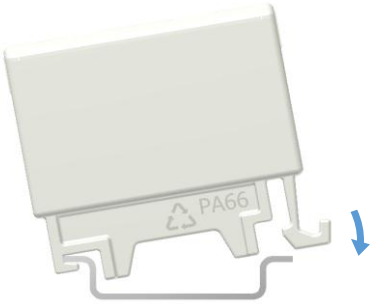

DIN-rail mounting
Set the connector to DIN-rail.
See picture. Push until "click"

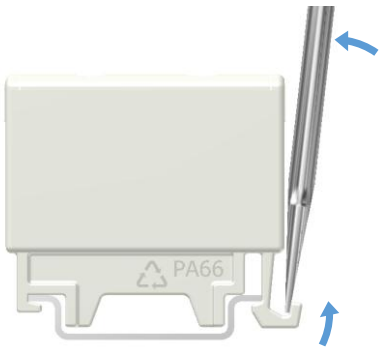

Removing from DIN-rail
Release the plastic snap with screwdriver. Lift the connector.

Connection

Screw			Tightening torque			Stripping length **L**	
	Thread	**M10**		1,5-2,5 mm²	**1,5 Nm**		**15 mm**
	SW	**5**		4-10 mm²	**5 Nm**		
				16-50 mm²	**10 Nm**		
				-	**-**		
			Max. wire cross section		**50 mm²**		

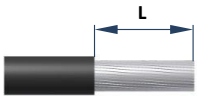

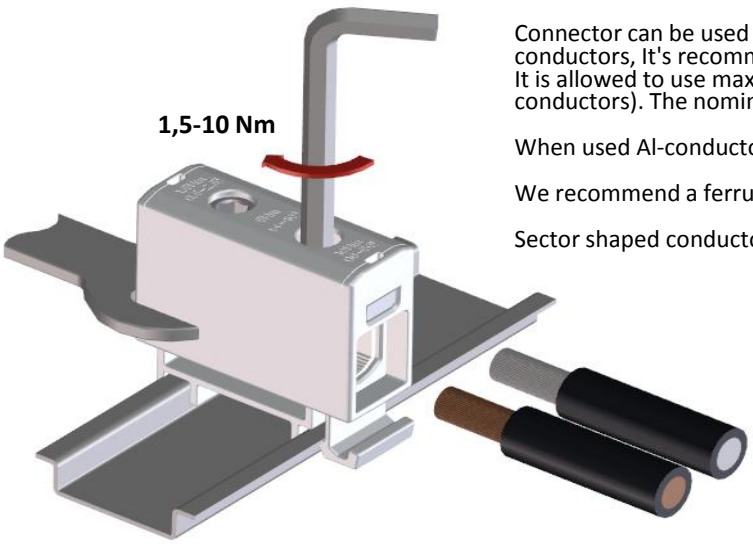

Installation

Connector can be used for both **copper- or aluminium conductors**. With the Al-conductors, It's recommended to use anti-corrosion paste. (e.g. Penetrox).
It is allowed to use max. of three adjacent cross sections in one space (Copper conductors). The nominal max. cross section value must not be exceeded.

When used Al-conductors, it is allowed to use only one conductor/space.

We recommend a ferrule when using a fine-stranded conductor.

Sector shaped conductors must be pre-rounded before installation.

Each protective or neutral conductor must have their own conductor space. SFS 6000:2007 clause 810.7

Cross section and max. number of Cu- conductors / space (Al- conductors in parenthesis)

1,5 mm2	2,5 mm2	6 mm2	10 mm2	16 mm2	25 mm2	35 mm2	50 mm2
3 (1)	**3 (1)**	**3 (1)**	**3 (1)**	**3 (1)**	**2 (1)**	**1 (1)**	**1 (1)**

The specified max. amount of conductors refers only to industrially installed terminals.

70 mm2	95 mm2	120 mm2	150 mm2	185 mm2	240 mm2	300 mm2	400 mm2
-	-	-	-	-	-	-	-